CRD 05 Series

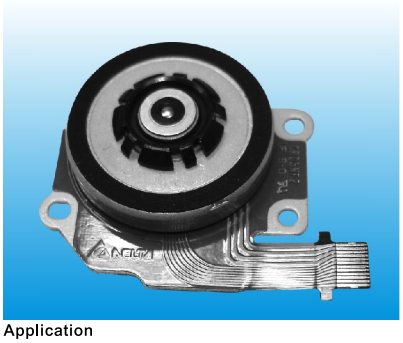

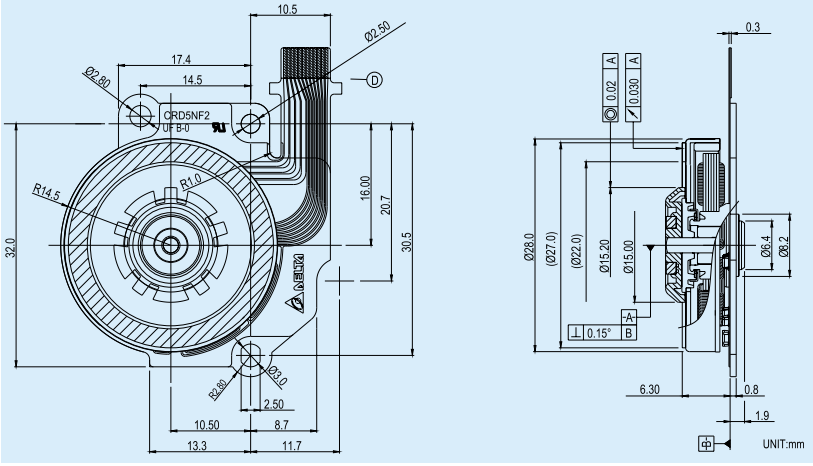

Application
1.BLDC Spindle Motor
2.Car Use Portable/ Audio-Viedo Machine

Specifications

Model No.	Working Voltage (V)	Rated Voltage (V)	Rated Speed (rpm)	Load Current (mA)	No Load Speed (rpm)	No Load Current (mA)	Starting Torque (mN·m)	Starting Current (mA)
CRD05NF001	3~15	8.0	5500	280	6800	110	9.2	700

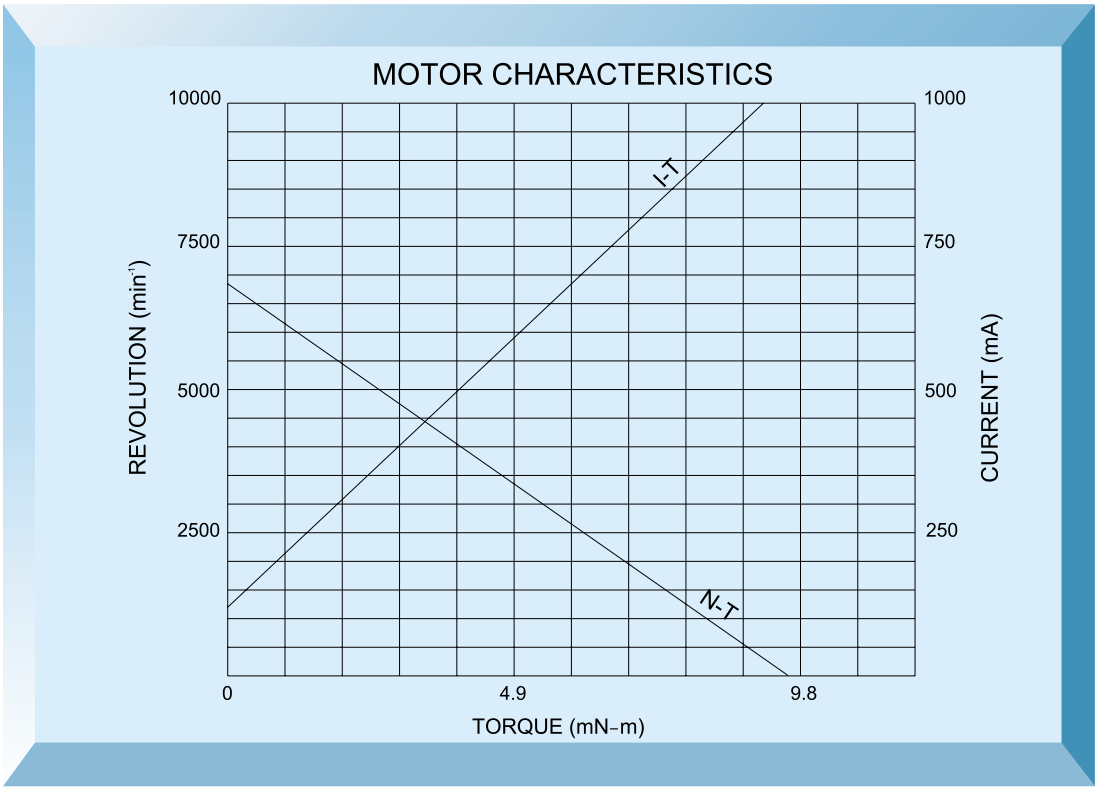

* All readings are typical values.
* Specifications are subject to change without notice.